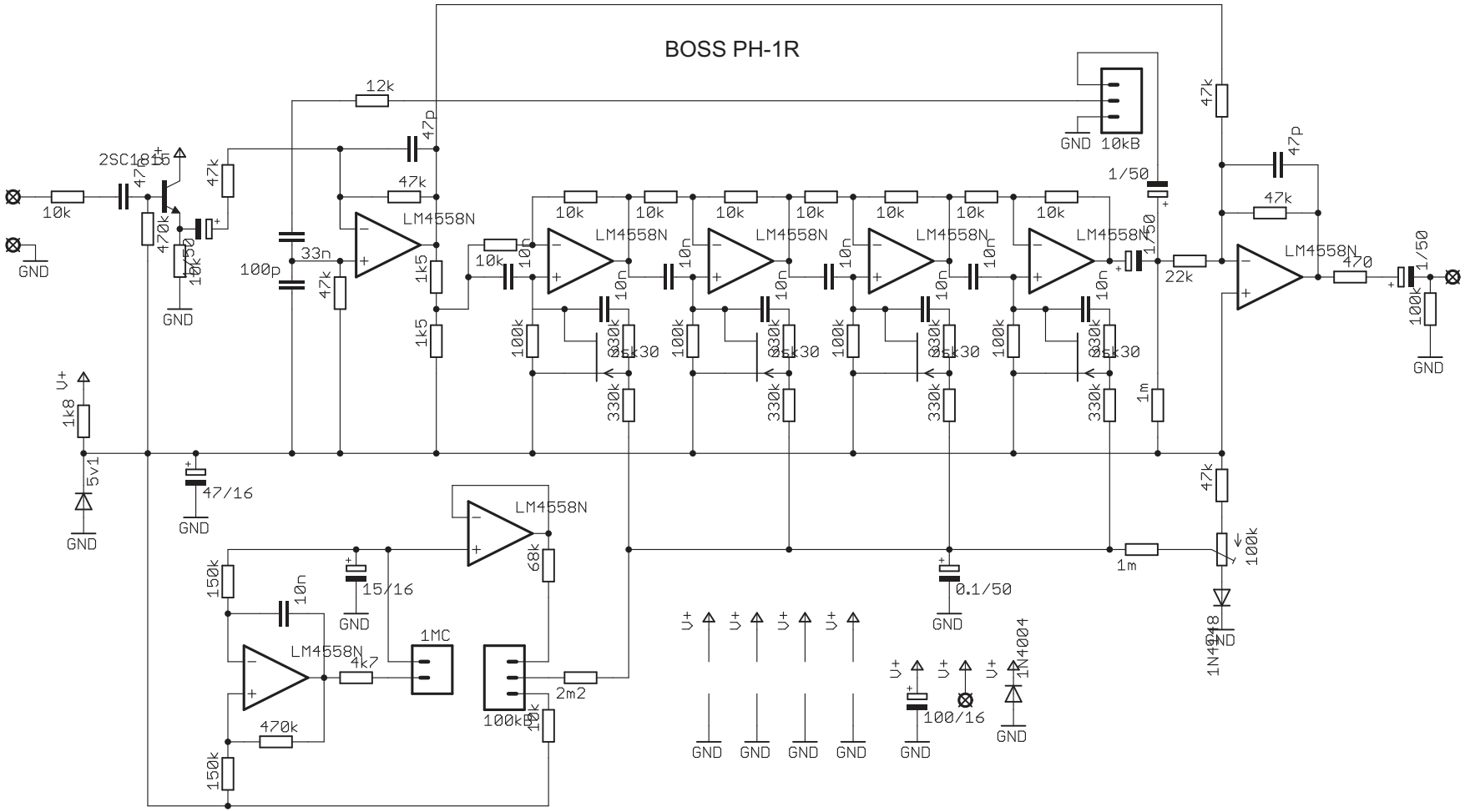
BOSS PH-1R
10kB
GND
12k
47p
47k
2SC1815
470k
10k
1/50
33n
100p
1k5
LM4558N
22k
470
100k
330k
5k30
1m
1k8
5v1
47/16
15/16
68k
150k
4k7
1MC
100kB
2m2
0.1/50
100/16
1N4004
1N4148
V+