Deep blue delay

C1	22n	R1	180k	IC1	TL072
C2	100p	R2	1m	IC2	7805L
C3	100p	R3	100k	U1	PT2399
C4	1u 50v	R4	330k		
C5	47u 16v	R5	22k		
C6	100n	R6	20k		
C7	100u 16v	R8	12k		
C8	100n	R9	2k		
C9	100n	R10	2k7		
C10	100n	R11	10k		
C11	100n	R13	10k		
C12	2n2	R14	20k		
C13	47n	R15	10k		
C14	15n	R16	10k		
C15	2n2	R18	10k		
C16	1u 50v	R19	5k1		
C18	4n7	R20	1k		
C19	22n	R21	10k		
C20	10n	R22	10k		
C21	1u 50v				
C22	47u 16v	REP	50kb		
C23	47u 16v	DT	50kb		
C24	1u 50v	MIX	50kb		

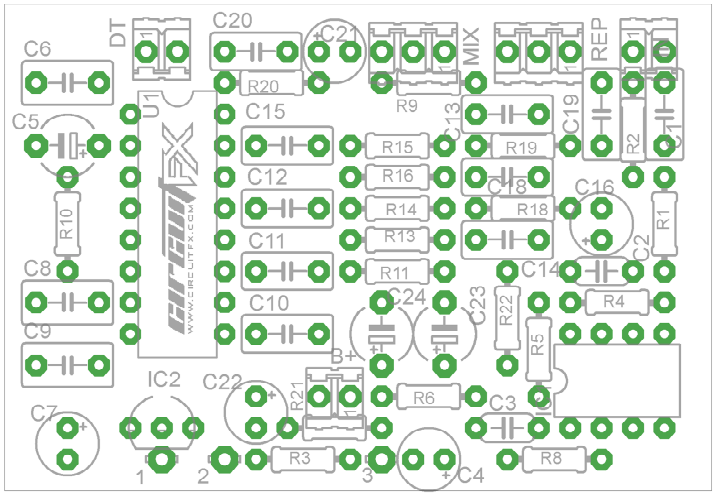

3	OUTPUT	1,2	GND

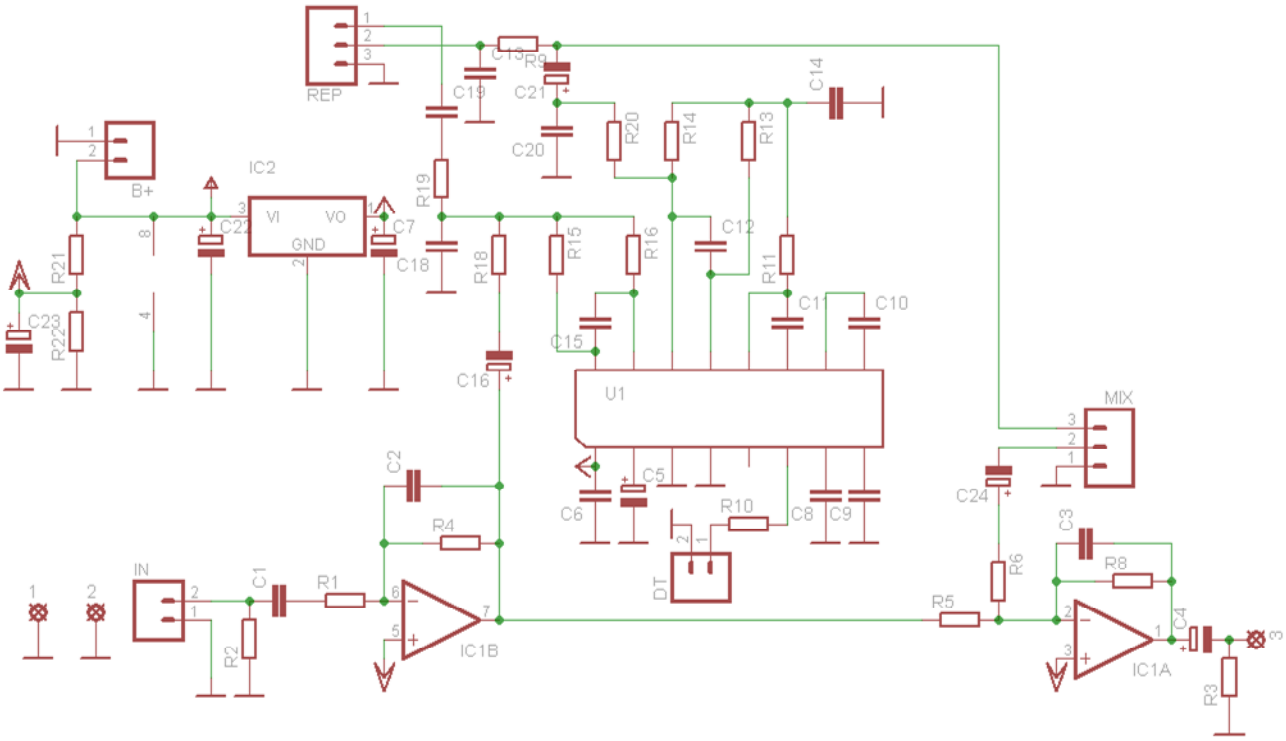

Site: www.circuitfx.com
Blog:www.circuitfx.wordpress.com
Drawing: effectmaker 12/07/60